Specification Table

HRX-C/LC

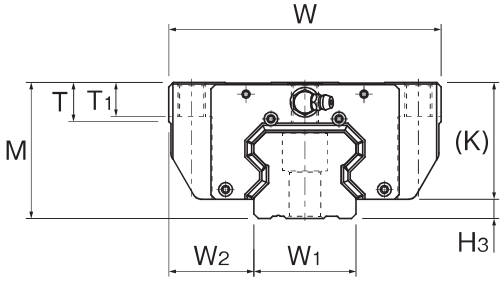

Model No.		External dimensions			Block dimensions												Pilot hole for side nipple			Greasing hole on the top face			
		M	W	L	B	C	C_2	S	H	L_1	T	T_1	K	N	E	Grease nipple	e_0	f_0	D_0	D_2 (O-ring)	V	e_1	d_2
HRX25	C	36	70	99.6	57	45	40	M8 through	6.8	75.4	9.5	10	31	5.5	12	B-M6F	6	6.2	5.2	6.2	0.3	4.5	1
	LC	36	70	116.4	57	45	40	M8 through	6.8	92.2	9.5	10	31	5.5	12	B-M6F	6	6.2	5.2	6.2	0.3	4.5	1
HRX30	C	42	90	110.6	72	52	44	M10 through	8.5	84.0	12	14	37	8.2	12	B-M6F	6.2	9.5	5.2	6.2	0.4	4.5	1
	LC	42	90	135.1	72	52	44	M10 through	8.5	108.5	12	14	37	8.2	12	B-M6F	6.2	9.5	5.2	6.2	0.4	4.5	1
HRX35	C	48	100	123.2	82	62	52	M10 through	8.5	92.2	12	10	41.5	8	12	B-M6F	7.2	9.5	5.2	10.2	0.45	5.8	1
	LC	48	100	151.2	82	62	52	M10 through	8.5	120.2	12	10	41.5	8	12	B-M6F	7.2	9.5	5.2	10.2	0.45	5.8	1
HRX45	C	60	120	150.7	100	80	60	M12 through	10.5	115.7	17.3	15	51.5	8.75	16	B-PT1/8	7.5	7.75	5.2	10.2	0.45	6.9	1
	LC	60	120	185.7	100	80	60	M12 through	10.5	150.7	17.3	15	51.5	8.75	16	B-PT1/8	7.5	7.75	5.2	10.2	0.45	6.9	1
HRX55	C	70	140	180.2	116	95	70	M14 through	12.5	143.2	18.2	18	59	11.2	16	B-PT1/8	6.8	9.3	5.2	10.2	0.45	6.8	1
	LC	70	140	229.7	116	95	70	M14 through	12.5	192.7	18.2	18	59	11.2	16	B-PT1/8	6.8	9.3	5.2	10.2	0.45	6.8	1
HRX65	C	90	170	239.1	142	110	82	M16 through	14.5	195.7	22.3	20	78	18	16	B-PT1/8	8.65	16.6	5.2	10.2	0.45	8.65	1
	LC	90	170	304.1	142	110	82	M16 through	14.5	260.7	22.3	20	78	18	16	B-PT1/8	8.65	16.6	5.2	10.2	0.45	8.65	1

Model Number Coding

Select an option Fixed symbol

HRX45 LC 2 SS C0 + 1200L P T -Ⅱ

- HRX45: Model number
- LC: LM block type (see p. 4)
- 2: Number of LM blocks used on a single rail
- SS: Contamination protection accessory symbol
- C0: Radial clearance symbol
- 1200L: LM rail length
- P: Accuracy symbol
  - H: High accuracy grade
  - P: Precision grade
- T: Symbol for LM rail jointed use
- -Ⅱ: Symbol for No. of rails used on the same plane

Note) Please contact THK if you wish to order LM rails and LM blocks separately.

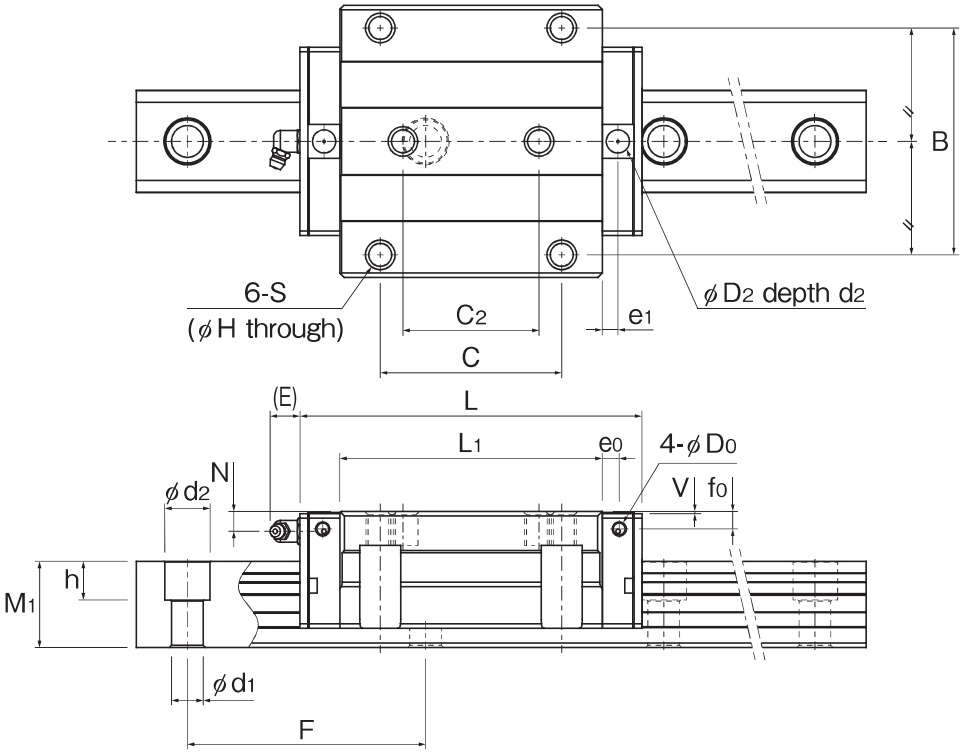

Unit: mm

	H_3	Rail dimensions					Basic load rating (kN)		Static permissible moment (kN·m)*					Weight	
		W_1 0 -0.05	W_2	M_1	F	$d_1 \times d_2 \times h$	C_{100}	C_0	M_A		M_B		M_C	LM block	LM rail
									1 block	2 blocks	1 block	2 blocks		(kg)	(kg/m)
	5	23	23.5	21.5	60	7×11×9	26.3	73.1	0.92	4.84	0.92	4.84	0.57	0.84	3.25
	5	23	23.5	21.5	60	7×11×9	30.8	89.3	1.37	6.86	1.37	6.86	0.69	1.03	3.25
	5	28	31	23.5	80	9×14×12	39.4	104.7	1.48	7.72	1.48	7.72	1.03	1.48	4.42
	5	28	31	23.5	80	9×14×12	48.0	135.2	2.44	12.06	2.44	12.06	1.33	1.93	4.42
	6.5	34	33	29	80	9×14×12	56.0	150.1	2.33	11.59	2.33	11.59	1.81	1.93	6.33
	6.5	34	33	29	80	9×14×12	68.9	195.7	3.92	18.60	3.92	18.60	2.36	2.55	6.33
	8.5	45	37.5	38	105	14×20×17	94.3	250.4	4.85	23.90	4.85	23.90	3.84	3.51	10.9
	8.5	45	37.5	38	105	14×20×17	116.0	326.7	8.17	38.44	8.17	38.44	5.01	4.64	10.9
	11	53	43.5	44	120	16×23×20	134.5	369.9	8.86	42.34	8.86	42.34	6.86	5.85	15.6
	11	53	43.5	44	120	16×23×20	169.5	497.9	15.86	72.70	15.86	72.70	9.24	7.96	15.6
	12	63	53.5	53	150	18×26×22	205.5	567.0	18.43	86.49	18.43	86.49	12.27	13.34	22.6
	12	63	53.5	53	150	18×26×22	257.0	756.0	32.04	146.69	32.04	146.69	16.35	17.94	22.6

*Static permissible moment 1 block: static permissible moment value with 1 LM block
2 blocks: static permissible moment value with 2 blocks in close contact with each other

Specification Table

HRX-R/LR

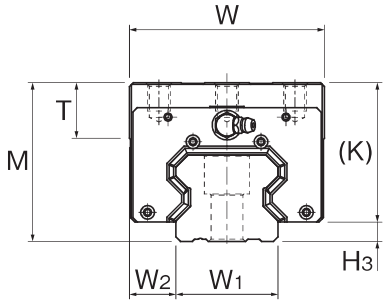

Model No.		External dimensions			Block dimensions									Pilot hole for side nipple			Greasing hole on the top face			
		M	W	L	B	C	S×ℓ	L_1	T	K	N	E	Grease nipple	e_0	f_0	D_0	D_2 (O-ring)	V	e_1	d_2
HRX25	R	40	48	99.6	35	35	M6×7	75.4	9	35	9.5	12	B-M6F	6	10.2	5.2	6.2	4.3	4.5	1
	LR	40	48	116.4	35	50	M6×7	92.2	9	35	9.5	12	B-M6F	6	10.2	5.2	6.2	4.3	4.5	1
HRX30	R	45	60	110.6	40	40	M8×8	84.0	12	40	11.2	12	B-M6F	6.2	12.5	5.2	6.2	3.4	4.5	1
	LR	45	60	135.1	40	60	M8×8	108.5	12	40	11.2	12	B-M6F	6.2	12.5	5.2	6.2	3.4	4.5	1
HRX35	R	55	70	123.2	50	50	M8×10	92.2	18.5	48.5	15	12	B-M6F	7.2	16.5	5.2	10.2	7.45	5.8	1
	LR	55	70	151.2	50	72	M8×10	120.2	18.5	48.5	15	12	B-M6F	7.2	16.5	5.2	10.2	7.45	5.8	1
HRX45	R	70	86	150.7	60	60	M10×12.5	115.7	24.5	61.5	18.75	16	B-PT1/8	7.5	17.75	5.2	10.2	10.45	6.9	1
	LR	70	86	185.7	60	80	M10×12.5	150.7	24.5	61.5	18.75	16	B-PT1/8	7.5	17.75	5.2	10.2	10.45	6.9	1
HRX55	R	80	100	180.2	75	75	M12×15	143.2	27.5	69	21.2	16	B-PT1/8	6.8	19.3	5.2	10.2	10.45	6.8	1
	LR	80	100	229.7	75	95	M12×15	192.7	27.5	69	21.2	16	B-PT1/8	6.8	19.3	5.2	10.2	10.45	6.8	1
HRX65	R	100	126	239.1	76	70	M16×20	195.7	29.5	88	28	16	B-PT1/8	8.65	26.6	5.2	10.2	10.45	8.65	1
	LR	100	126	304.1	76	120	M16×20	260.7	29.5	88	28	16	B-PT1/8	8.65	26.6	5.2	10.2	10.45	8.65	1

Model Number Coding

Select an option Fixed symbol

HRX45 LR 2 SS C0 + 1200L P T -Ⅱ

- HRX45: Model number
- LR: LM block type (see p. 4)
- 2: Number of LM blocks used on a single rail
- SS: Contamination protection accessory symbol
- C0: Radial clearance symbol
- 1200L: LM rail length
- P: Accuracy symbol
  - H: High accuracy grade
  - P: Precision grade
- T: Symbol for LM rail jointed use
- -Ⅱ: Symbol for No. of rails used on the same plane

Note) Please contact THK if you wish to order LM rails and LM blocks separately.

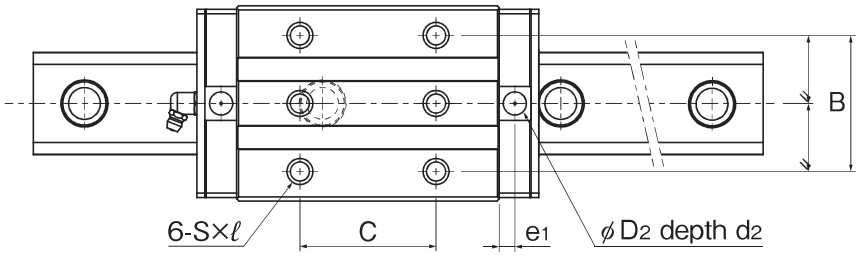

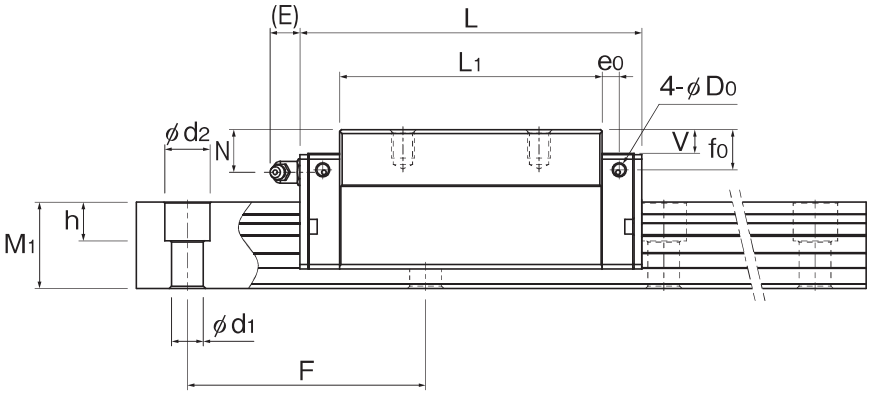

Unit: mm

	H_3	Rail dimensions					Basic load rating (kN)		Static permissible moment (kN·m)*					Weight	
		W_1 0 -0.05	W_2	M_1	F	$d_1 \times d_2 \times h$	C_{100}	C_0	M_A		M_B		M_C	LM block	LM rail
									1 block	2 blocks	1 block	2 blocks		(kg)	(kg/m)
	5	23	12.5	21.5	60	7×11×9	26.3	73.1	0.92	4.84	0.92	4.84	0.57	0.72	3.25
	5	23	12.5	21.5	60	7×11×9	30.8	89.3	1.37	6.86	1.37	6.86	0.69	0.86	3.25
	5	28	16	23.5	80	9×14×12	39.4	104.7	1.48	7.72	1.48	7.72	1.03	1.16	4.42
	5	28	16	23.5	80	9×14×12	48.0	135.2	2.44	12.06	2.44	12.06	1.33	1.48	4.42
	6.5	34	18	29	80	9×14×12	56.0	150.1	2.33	11.59	2.33	11.59	1.81	1.73	6.33
	6.5	34	18	29	80	9×14×12	68.9	195.7	3.92	18.60	3.92	18.60	2.36	2.23	6.33
	8.5	45	20.5	38	105	14×20×17	94.3	250.4	4.85	23.90	4.85	23.90	3.84	3.20	10.9
	8.5	45	20.5	38	105	14×20×17	116.0	326.7	8.17	38.44	8.17	38.44	5.01	4.15	10.9
	11	53	23.5	44	120	16×23×20	134.5	369.9	8.86	42.34	8.86	42.34	6.86	5.31	15.6
	11	53	23.5	44	120	16×23×20	169.5	497.9	15.86	72.70	15.86	72.70	9.24	7.12	15.6
	12	63	31.5	53	150	18×26×22	205.5	567.0	18.43	86.49	18.43	86.49	12.27	12.06	22.6
	12	63	31.5	53	150	18×26×22	257.0	756.0	32.04	146.69	32.04	146.69	16.35	16.01	22.6

*Static permissible moment 1 block: static permissible moment value with 1 LM block
2 blocks: static permissible moment value with 2 blocks in close contact with each other