Specification Table

HDR-C/LC

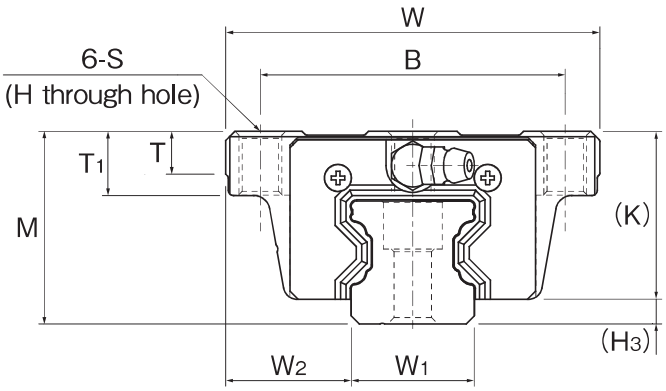

Model No.		External dimensions							LM block dimensions								Pilot hole for side nipple			
		Height M	Width W	Length L	Pitch B	Pitch C_1	Pitch C_2	Mounting hole S	H	L_1	T	T_1	K	N	E	Grease nipple	e_0	f_0	D_0	H_3
HDR15	C	24	47	61.4	38	30	26	M5	4.4	40	5.9	9.9	20.2	3.5	3.4	PB107	3.5	3.6	2.9	3.8
	LC	24	47	74.9	38	30	26	M5	4.4	53.5	5.9	9.9	20.2	3.5	3.4	PB107	3.5	3.6	2.9	3.8
HDR20	C	30	63	74.9	53	40	35	M6	5.4	51.7	7.2	9.9	25.5	4.7	3	PB107	3.0	4.7	2.9	4.5
	LC	30	63	90.7	53	40	35	M6	5.4	67.5	7.2	9.9	25.5	4.7	3	PB107	3.0	4.7	2.9	4.5
HDR25	C	36	70	87.6	57	45	40	M8	6.8	60	8	11.9	31.4	6.4	10	B-M6F	5.1	6.6	5.2	4.6
	LC	36	70	104.5	57	45	40	M8	6.8	76.9	8	11.9	31.4	6.4	10	B-M6F	5.1	6.6	5.2	4.6
HDR30	C	42	90	102.1	72	52	44	M10	8.5	70.5	8	14.9	36.3	7.5	9.5	B-M6F	4.8	7.5	5.2	5.7
	LC	42	90	124.1	72	52	44	M10	8.5	92.5	8	14.9	36.3	7.5	9.5	B-M6F	4.8	7.5	5.2	5.7
HDR35	C	48	100	116.5	82	62	52	M10	8.5	80.5	11.5	14.9	41.8	9.5	9.3	B-M6F	5.6	9.5	5.2	6.2
	LC	48	100	139.5	82	62	52	M10	8.5	103.5	11.5	14.9	41.8	9.5	9.3	B-M6F	5.6	9.5	5.2	6.2
HDR45	C	60	120	145.6	100	80	60	M12	10.5	104.2	14.1	17.9	50.5	10.5	14.3	B-PT1/8	8	10.5	5.2	9.5
	LC	60	120	177.3	100	80	60	M12	10.5	135.9	14.1	17.9	50.5	10.5	14.3	B-PT1/8	8	10.5	5.2	9.5
HDR55	C	70	140	179.2	116	95	70	M14	12.5	134.2	16	20.9	58	12	14.3	B-PT1/8	9	12	5.2	12
	LC	70	140	217.3	116	95	70	M14	12.5	172.3	16	20.9	58	12	14.3	B-PT1/8	9	12	5.2	12
HDR65	C	90	170	199.2	142	110	82	M16	14.5	144.8	18.8	23.9	77.3	19	14.3	B-PT1/8	10	19	5.2	12.7
	LC	90	170	258.8	142	110	82	M16	14.5	204.4	18.8	23.9	77.3	19	14.3	B-PT1/8	10	19	5.2	12.7

Model Number Coding

Specify the highlighted codes. *Specify each item for the models in the catalog.

HDR25 LC 2 UU C0 -OIL +1200L P Z

- **HDR25** — Model number
- **LC** — LM block type (see p. 7)
- **2** — Number of LM blocks used on a single rail
- **UU** — Contamination protection accessory symbol (see p. 8)
  - No symbol: Without seal
- **C0** — Radial clearance symbol
  - No symbol: Normal
  - C1: Light preload
  - C0: Medium preload
- **-OIL** — Lubrication symbol
  - No symbol: Grease lubrication
  - -OIL: Oil lubrication
- **+1200L** — LM rail length (in mm)
- **P** — Accuracy symbol
  - No symbol: Normal grade
  - H: High accuracy grade
  - P: Precision grade
  - SP: Super precision grade
  - UP: Ultra precision grade
- **Z** — Plate cover
  - No symbol: Without plate cover

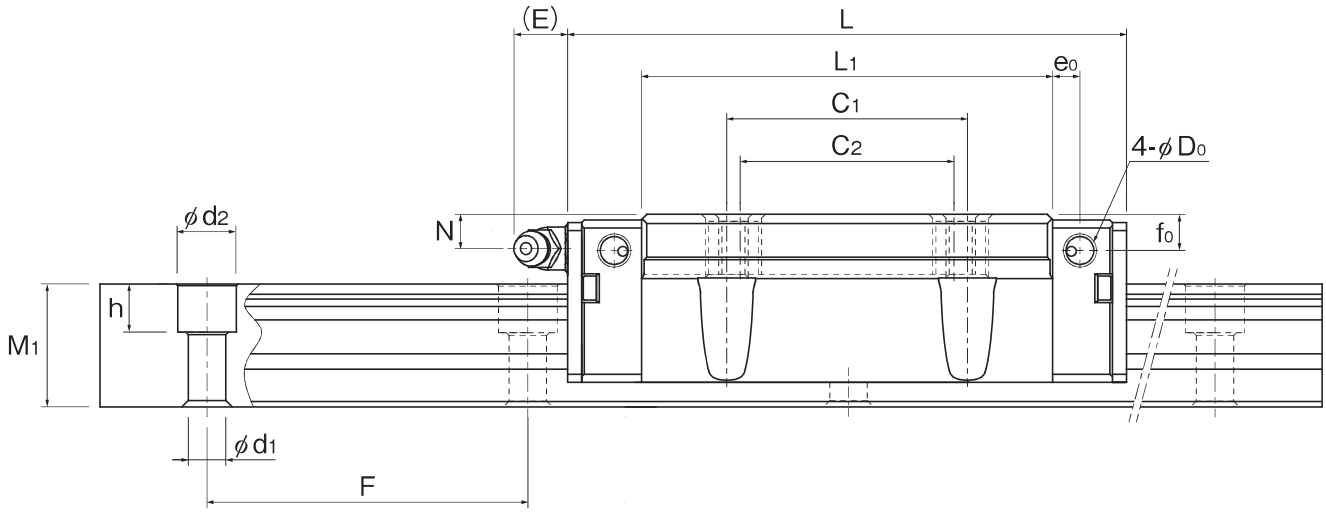

Unit: mm

	LM rail dimensions					Basic load rating (kN)		Static permissible moment* (kN·m)					Weight	
	Width W_1 $^{0}_{-0.05}$	W_2	Height M_1	Pitch F	Mounting hole $d_1 \times d_2 \times h$	C	C_0	M_A 1 block	M_A 2 blocks	M_B 1 block	M_B 2 blocks	M_C	LM block kg	LM rail kg/m
	15	16	15.6	60	4.5 × 7.5 × 5.3	10.9	15.7	0.098	0.601	0.098	0.601	0.155	0.21	1.5
	15	16	15.6	60	4.5 × 7.5 × 5.3	13.7	21.7	0.182	0.984	0.182	0.984	0.215	0.28	
	20	21.5	20.1	60	6 × 9.5 × 8.5	19.8	27.4	0.227	1.27	0.227	1.27	0.348	0.46	2.5
	20	21.5	20.1	60	6 × 9.5 × 8.5	23.9	35.8	0.378	1.97	0.378	1.97	0.456	0.59	
	23	23.5	23	60	7 × 11 × 9	29.2	39.5	0.392	2.13	0.392	2.13	0.574	0.71	3.4
	23	23.5	23	60	7 × 11 × 9	33.8	48.6	0.582	3.09	0.582	3.09	0.707	0.90	
	28	31	26	80	9 × 14 × 12	40.5	53.7	0.623	3.38	0.623	3.38	0.956	1.25	4.8
	28	31	26	80	9 × 14 × 12	48.9	70.2	1.04	5.26	1.04	5.26	1.25	1.61	
	34	33	30	80	9 × 14 × 12	53.9	70.2	0.93	5.03	0.93	5.03	1.54	1.76	6.5
	34	33	30	80	9 × 14 × 12	62.4	86.4	1.38	7.32	1.38	7.32	1.9	2.23	
	45	37.5	37	105	14 × 20 × 17	86.9	110	1.82	9.82	1.82	9.82	3	3.08	10.8
	45	37.5	37	105	14 × 20 × 17	105	143	3.03	15.3	3.03	15.3	3.93	4.00	
	53	43.5	43	120	16 × 23 × 20	135	170	3.61	18.6	3.61	18.6	5.51	5.21	14.8
	53	43.5	43	120	16 × 23 × 20	161	219	5.84	28.5	5.84	28.5	7.09	6.66	
	63	53.5	54	150	18 × 26 × 22	195	228	5.27	28	5.27	28	8.79	9.38	22.3
	63	53.5	54	150	18 × 26 × 22	249	323	10.2	50.3	10.2	50.3	12.5	13.15	

*Static permissible moment 1 block: Static permissible moment value with 1 LM block
2 blocks: Static permissible moment value with 2 LM blocks in close contact with each other

Specification Table

HDR-R/LR

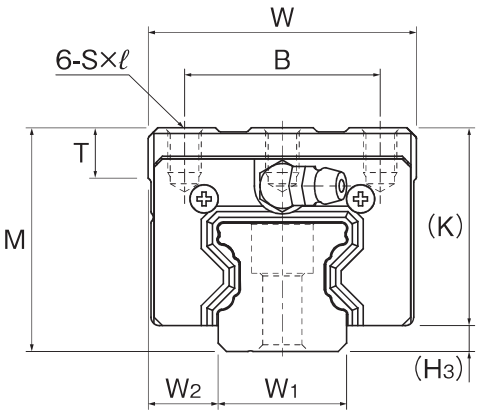

Model No.		External dimensions			LM block dimensions									Pilot hole for side nipple			
		Height M	Width W	Length L	Pitch B	Pitch C	Mounting hole S×ℓ	L_1	T	K	N	E	Grease nipple	e_0	f_0	D_0	H_3
HDR15	R	28	34	61.4	26	26	M4×5	40	6	24.2	7.5	3.4	PB107	3.5	7.6	2.9	3.8
	LR	28	34	74.9	26	26	M4×5	53.5	6	24.2	7.5	3.4	PB107	3.5	7.6	2.9	3.8
HDR20	R	30	44	74.9	32	36	M5×6	51.7	8	25.5	4.7	3	PB107	3.0	4.7	2.9	4.5
	LR	30	44	90.7	32	50	M5×6	67.5	8	25.5	4.7	3	PB107	3.0	4.7	2.9	4.5
HDR25	R	40	48	87.6	35	35	M6×8	60	9	35.4	10.4	10	B-M6F	5.1	10.6	5.2	4.6
	LR	40	48	104.5	35	50	M6×8	76.9	9	35.4	10.4	10	B-M6F	5.1	10.6	5.2	4.6
HDR30	R	45	60	102.1	40	40	M8×10	70.5	9	39.3	10.5	9.5	B-M6F	4.8	10.5	5.2	5.7
	LR	45	60	124.1	40	60	M8×10	92.5	9	39.3	10.5	9.5	B-M6F	4.8	10.5	5.2	5.7
HDR35	R	55	70	116.5	50	50	M8×12	80.5	11.8	48.8	16.5	9.3	B-M6F	5.6	16.5	5.2	6.2
	LR	55	70	139.5	50	72	M8×12	103.5	11.8	48.8	16.5	9.3	B-M6F	5.6	16.5	5.2	6.2
HDR45	R	70	86	145.6	60	60	M10×17	104.2	15	60.5	20.5	14.3	B-PT1/8	8	20.5	5.2	9.5
	LR	70	86	177.3	60	80	M10×17	135.9	15	60.5	20.5	14.3	B-PT1/8	8	20.5	5.2	9.5
HDR55	R	80	100	179.2	75	75	M12×18	134.2	20.5	68	22	14.3	B-PT1/8	9	22	5.2	12
	LR	80	100	217.3	75	95	M12×18	172.3	20.5	68	22	14.3	B-PT1/8	9	22	5.2	12
HDR65	R	90	126	199.2	76	70	M16×20	144.8	23	77.3	19	14.3	B-PT1/8	10	19	5.2	12.7
	LR	90	126	258.8	76	120	M16×20	204.4	23	77.3	19	14.3	B-PT1/8	10	19	5.2	12.7

Model Number Coding

Specify the highlighted codes. *Specify each item for the models in the catalog.

HDR25 LR 2 UU C0 -OIL +1200L P Z

- HDR25: Model number
- LR: LM block type (see p. 7)
- 2: Number of LM blocks used on a single rail
- UU: Contamination protection accessory symbol (see p. 8)
  - No symbol: Without seal
- C0: Radial clearance symbol
  - No symbol: Normal
  - C1: Light preload
  - C0: Medium preload
- -OIL: Lubrication symbol
  - No symbol: Grease lubrication
  - -OIL: Oil lubrication
- +1200L: LM rail length (in mm)
- P: Accuracy symbol
  - No symbol: Normal grade
  - H: High accuracy grade
  - P: Precision grade
  - SP: Super precision grade
  - UP: Ultra precision grade
- Z: Plate cover
  - No symbol: Without plate cover

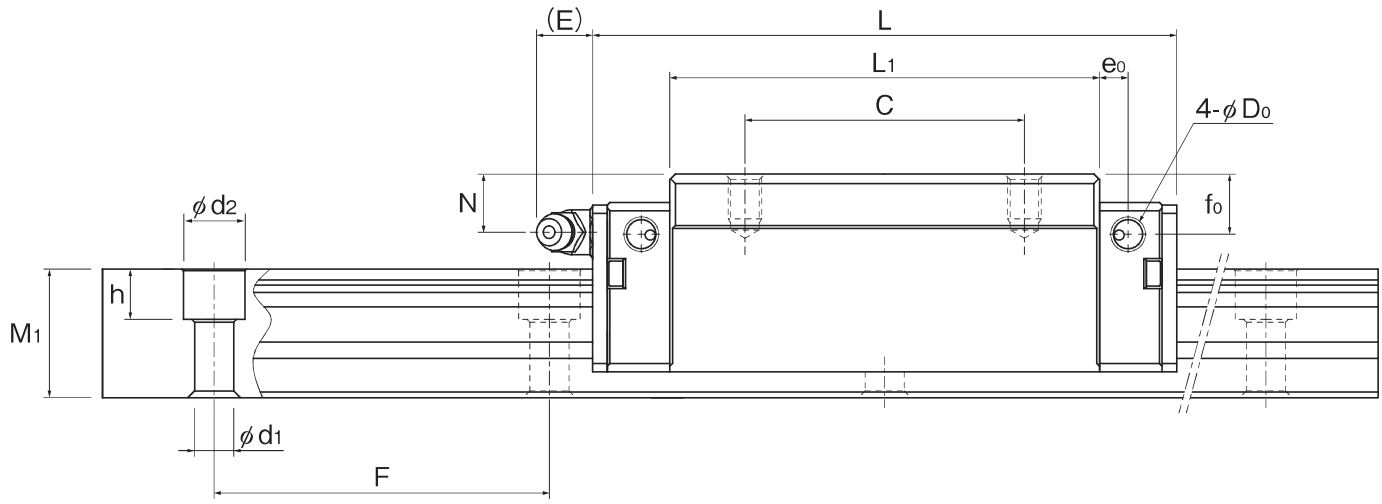

Unit: mm

	LM rail dimensions					Basic load rating (kN)		Static permissible moment* (kN·m)					Weight	
	Width W_1 $^{0}_{-0.05}$	W_2	Height M_1	Pitch F	Mounting hole $d_1 \times d_2 \times h$	C	C_0	M_A 1 block	M_A 2 blocks	M_B 1 block	M_B 2 blocks	M_C	LM block kg	LM rail kg/m
	15	9.5	15.6	60	4.5 × 7.5 × 5.3	10.9	15.7	0.098	0.601	0.098	0.601	0.155	0.19	1.5
	15	9.5	15.6	60	4.5 × 7.5 × 5.3	13.7	21.7	0.182	0.984	0.182	0.984	0.215	0.28	
	20	12	20.1	60	6 × 9.5 × 8.5	19.8	27.4	0.227	1.27	0.227	1.27	0.348	0.36	2.5
	20	12	20.1	60	6 × 9.5 × 8.5	23.9	35.8	0.378	1.97	0.378	1.97	0.456	0.42	
	23	12.5	23	60	7 × 11 × 9	29.2	39.5	0.392	2.13	0.392	2.13	0.574	0.64	3.4
	23	12.5	23	60	7 × 11 × 9	33.8	48.6	0.582	3.09	0.582	3.09	0.707	0.74	
	28	16	26	80	9 × 14 × 12	40.5	53.7	0.623	3.38	0.623	3.38	0.956	1.06	4.8
	28	16	26	80	9 × 14 × 12	48.9	70.2	1.04	5.26	1.04	5.26	1.25	1.37	
	34	18	30	80	9 × 14 × 12	53.9	70.2	0.93	5.03	0.93	5.03	1.54	1.75	6.5
	34	18	30	80	9 × 14 × 12	62.4	86.4	1.38	7.32	1.38	7.32	1.9	2.04	
	45	20.5	37	105	14 × 20 × 17	86.9	110	1.82	9.82	1.82	9.82	3	3.16	10.8
	45	20.5	37	105	14 × 20 × 17	105	143	3.03	15.3	3.03	15.3	3.93	4.07	
	53	23.5	43	120	16 × 23 × 20	135	170	3.61	18.6	3.61	18.6	5.51	5.28	14.8
	53	23.5	43	120	16 × 23 × 20	161	219	5.84	28.5	5.84	28.5	7.09	6.72	
	63	31.5	54	150	18 × 26 × 22	195	228	5.27	28	5.27	28	8.79	8.03	22.3
	63	31.5	54	150	18 × 26 × 22	249	323	10.2	50.3	10.2	50.3	12.5	11.17	

*Static permissible moment 1 block: Static permissible moment value with 1 LM block
2 blocks: Static permissible moment value with 2 LM blocks in close contact with each other

Specification Table

HDR-UV/UW

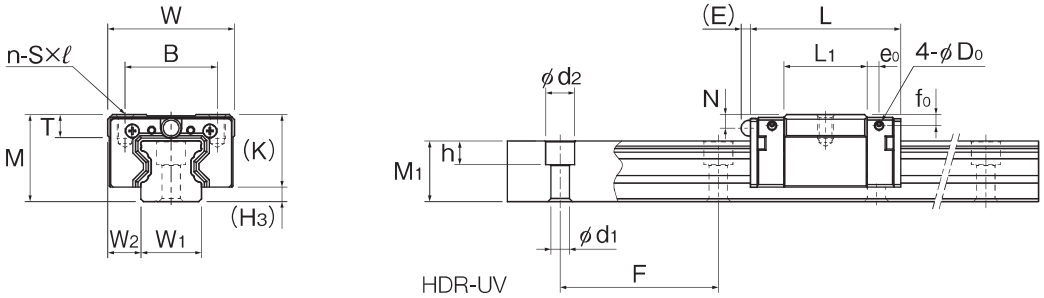

Model No.		External dimensions Height M	Width W	Length L	LM block dimensions Pitch B	Pitch C	n	Mounting hole S×ℓ	L1	T	K	N	E	Grease nipple	Pilot hole for side nipple e0	f0	D0	H3
HDR20	UV	28	42	49	32	-	2	M5×7	26.3	8	22.6	3.8	3	PB107	3.55	3.56	2.9	5.4
	UW	28	42	68.8	32	32	4	M5×7	46.1	8	22.6	3.8	3	PB107	3.55	3.56	2.9	5.4
HDR25	UV	33	48	57	35	-	2	M6×9	31.5	8	27.5	5.1	3.5	PB1021B	4.55	4.16	2.9	5.5
	UW	33	48	80.9	35	35	4	M6×9	55.4	8	27.5	5.1	3.5	PB1021B	4.55	4.16	2.9	5.5

HDR-US/UT

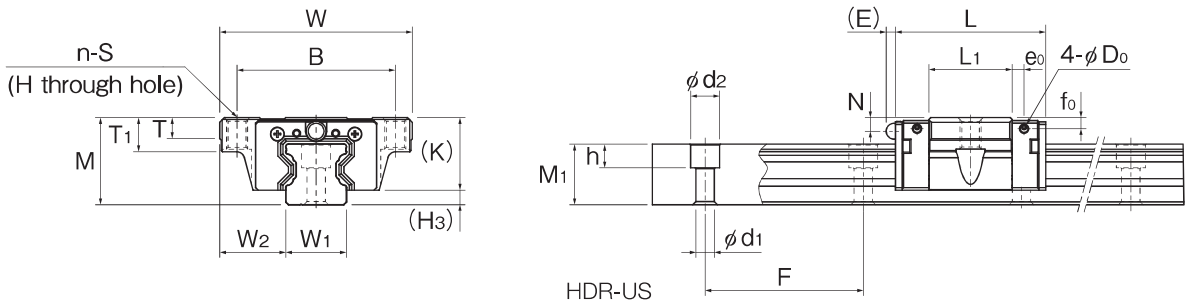

Model No.		External dimensions Height M	Width W	Length L	LM block dimensions Pitch B	Pitch C	n	H	Mounting hole S	L1	T	T1	K	N	E	Grease nipple	Pilot hole for side nipple e0	f0	D0	H3
HDR20	US	28	59	49	49	-	2	5.4	M6	26.3	7.2	9.9	22.6	3.8	3	PB107	3.55	3.56	2.9	5.4
	UT	28	59	68.8	49	32	4	5.4	M6	46.1	7.2	9.9	22.6	3.8	3	PB107	3.55	3.56	2.9	5.4
HDR25	US	33	73	57	60	-	2	6.8	M8	31.5	8	11.9	27.5	5.1	3.5	PB1021B	4.55	4.16	2.9	5.5
	UT	33	73	80.9	60	35	4	6.8	M8	55.4	8	11.9	27.5	5.1	3.5	PB1021B	4.55	4.16	2.9	5.5

Model Number Coding

Specify the highlighted codes. *Specify each item for the models in the catalog.

HDR25 UW 2 UU C0 -OIL +1200L P Z

- HDR25: Model number
- UW: LM block type (see p. 7)
- 2: Number of LM blocks used on a single rail
- UU: Contamination protection accessory symbol (see p. 8)
  - No symbol: Without seal
- C0: Radial clearance symbol
  - No symbol: Normal
  - C1: Light preload
  - C0: Medium preload
- -OIL: Lubrication symbol
  - No symbol: Grease lubrication
  - -OIL: Oil lubrication
- +1200L: LM rail length (in mm)
- P: Accuracy symbol
  - No symbol: Normal grade
  - H: High accuracy grade
  - P: Precision grade
  - SP: Super precision grade
  - UP: Ultra precision grade
- Z: Plate cover
  - No symbol: Without plate cover

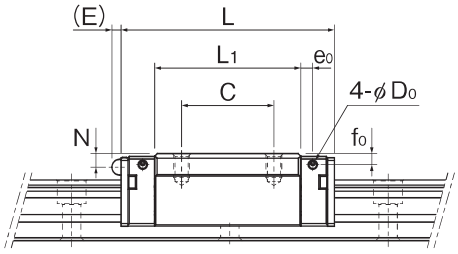

HDR-UW

Unit: mm

	LM rail dimensions					Basic load rating (kN)		Static permissible moment* (kN·m)					Weight	
	Width W_1 0 -0.05	W_2	Height M_1	Pitch F	Mounting hole $d_1 \times d_2 \times h$	C	C_0	M_A		M_B		M_C	LM block	LM rail
								1 block	2 blocks	1 block	2 blocks		kg	kg/m
	20	11	20.1	60	6 × 9.5 × 8.5	12.8	14.8	0.072	0.477	0.072	0.477	0.188	0.18	2.5
	20	11	20.1	60	6 × 9.5 × 8.5	18.7	25.3	0.195	1.078	0.195	1.078	0.322	0.28	
	23	12.5	23	60	7 × 11 × 9	18.9	21.3	0.124	0.795	0.124	0.795	0.309	0.23	3.4
	23	12.5	23	60	7 × 11 × 9	27.6	36.4	0.337	1.822	0.337	1.822	0.53	0.38	

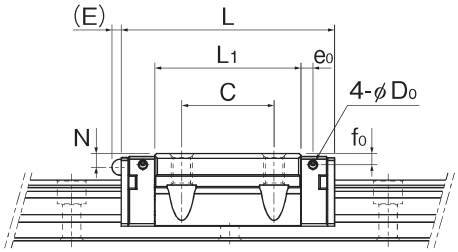

HDR-UT

Unit: mm

	LM rail dimensions					Basic load rating (kN)		Static permissible moment* (kN·m)					Weight	
	Width W_1 0 -0.05	W_2	Height M_1	Pitch F	Mounting hole $d_1 \times d_2 \times h$	C	C_0	M_A		M_B		M_C	LM block	LM rail
								1 block	2 blocks	1 block	2 blocks		kg	kg/m
	20	19.5	20.1	60	6 × 9.5 × 8.5	12.8	14.8	0.072	0.477	0.072	0.477	0.188	0.24	2.5
	20	19.5	20.1	60	6 × 9.5 × 8.5	18.7	25.3	0.195	1.078	0.195	1.078	0.322	0.35	
	23	25	23	60	7 × 11 × 9	18.9	21.3	0.124	0.795	0.124	0.795	0.309	0.46	3.4
	23	25	23	60	7 × 11 × 9	27.6	36.4	0.337	1.822	0.337	1.822	0.53	0.65	

*Static permissible moment 1 block: Static permissible moment value with 1 LM block
2 blocks: Static permissible moment value with 2 LM blocks in close contact with each other

Specification Table

HDR-V/LV

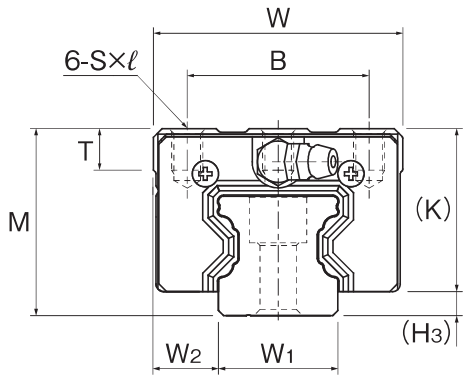

Model No.		External dimensions			LM block dimensions									Pilot hole for side nipple			
		Height M	Width W	Length L	Pitch B	Pitch C	Mounting hole S×ℓ	L_1	T	K	N	E	Grease nipple	e_0	f_0	D_0	H_3
HDR15	V	24	34	61.4	26	26	M4×4	40	5.9	20.2	3.5	3.4	PB107	3.5	3.6	2.9	3.8
	LV	24	34	74.9	26	26	M4×4	53.5	5.9	20.2	3.5	3.4	PB107	3.5	3.6	2.9	3.8
HDR25	V	36	48	87.6	35	35	M6×8	60	8	31.4	6.4	10	B-M6F	5.1	6.6	5.2	4.6
	LV	36	48	104.5	35	50	M6×8	76.9	8	31.4	6.4	10	B-M6F	5.1	6.6	5.2	4.6
HDR30	V	42	60	102.1	40	40	M8×10	70.5	8	36.3	7.5	9.5	B-M6F	4.8	7.5	5.2	5.7
	LV	42	60	124.1	40	60	M8×10	92.5	8	36.3	7.5	9.5	B-M6F	4.8	7.5	5.2	5.7
HDR35	V	48	70	116.5	50	50	M8×12	80.5	11.5	41.8	9.5	9.3	B-M6F	5.6	9.5	5.2	6.2
	LV	48	70	139.5	50	72	M8×12	103.5	11.5	41.8	9.5	9.3	B-M6F	5.6	9.5	5.2	6.2
HDR45	V	60	86	145.6	60	60	M10×15	104.2	14.9	50.5	10.5	14.3	B-PT1/8	8	10.5	5.2	9.5
	LV	60	86	177.3	60	80	M10×15	135.9	14.9	50.5	10.5	14.3	B-PT1/8	8	10.5	5.2	9.5
HDR55	V	70	100	179.2	75	75	M12×15	134.2	19.4	58	12	14.3	B-PT1/8	9	12	5.2	12
	LV	70	100	217.3	75	95	M12×15	172.3	19.4	58	12	14.3	B-PT1/8	9	12	5.2	12

Model Number Coding

Specify the highlighted codes. *Specify each item for the models in the catalog.

HDR25 LV 2 UU C0 -OIL +1200L P Z

- HDR25: Model number
- LV: LM block type (see p. 7)
- 2: Number of LM blocks used on a single rail
- UU: Contamination protection accessory symbol (see p. 8)
  - No symbol: Without seal
- C0: Radial clearance symbol
  - No symbol: Normal
  - C1: Light preload
  - C0: Medium preload
- -OIL: Lubrication symbol
  - No symbol: Grease lubrication
  - -OIL: Oil lubrication
- +1200L: LM rail length (in mm)
- P: Accuracy symbol
  - No symbol: Normal grade
  - H: High accuracy grade
  - P: Precision grade
  - SP: Super precision grade
  - UP: Ultra precision grade
- Z: Plate cover
  - No symbol: Without plate cover

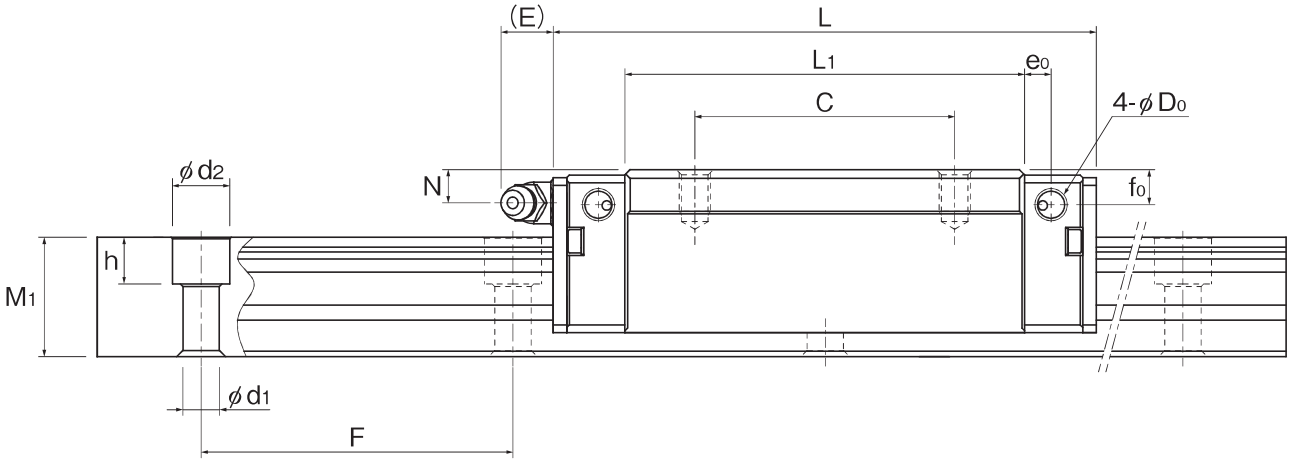

Unit: mm

	LM rail dimensions					Basic load rating (kN)		Static permissible moment* (kN·m)					Weight	
	Width W_1 $^{0}_{-0.05}$	W_2	Height M_1	Pitch F	Mounting hole $d_1 \times d_2 \times h$	C	C_0	M_A 1 block	M_A 2 blocks	M_B 1 block	M_B 2 blocks	M_C	LM block kg	LM rail kg/m
	15	9.5	15.6	60	4.5 × 7.5 × 5.3	10.9	15.7	0.098	0.601	0.098	0.601	0.155	0.15	1.5
	15	9.5	15.6	60	4.5 × 7.5 × 5.3	13.7	21.7	0.182	0.984	0.182	0.984	0.215	0.20	
	23	12.5	23	60	7 × 11 × 9	29.2	39.5	0.392	2.13	0.392	2.13	0.574	0.51	3.4
	23	12.5	23	60	7 × 11 × 9	33.8	48.6	0.582	3.09	0.582	3.09	0.707	0.62	
	28	16	26	80	9 × 14 × 12	40.5	53.7	0.623	3.38	0.623	3.38	0.956	0.74	4.8
	28	16	26	80	9 × 14 × 12	48.9	70.2	1.04	5.26	1.04	5.26	1.25	1.00	
	34	18	30	80	9 × 14 × 12	53.9	70.2	0.93	5.03	0.93	5.03	1.54	1.34	6.5
	34	18	30	80	9 × 14 × 12	62.4	86.4	1.38	7.32	1.38	7.32	1.9	1.65	
	45	20.5	37	105	14 × 20 × 17	86.9	110	1.82	9.82	1.82	9.82	3	2.47	10.8
	45	20.5	37	105	14 × 20 × 17	105	143	3.03	15.3	3.03	15.3	3.93	3.17	
	53	23.5	43	120	16 × 23 × 20	135	170	3.61	18.6	3.61	18.6	5.51	4.25	14.8
	53	23.5	43	120	16 × 23 × 20	161	219	5.84	28.5	5.84	28.5	7.09	5.40	

*Static permissible moment 1 block: Static permissible moment value with 1 LM block
2 blocks: Static permissible moment value with 2 LM blocks in close contact with each other